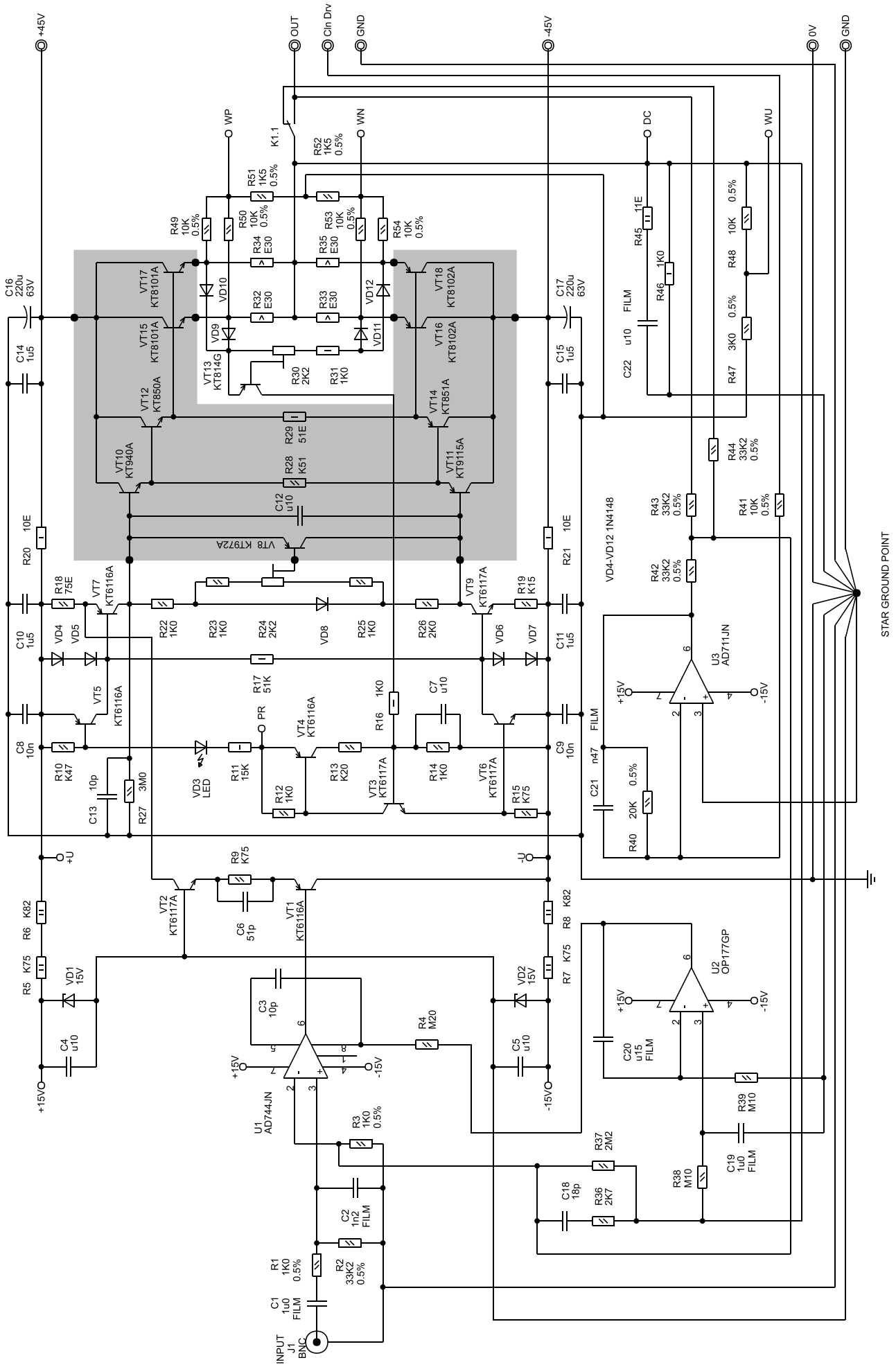
+45V
OUT
Clin Drv
GND
-45V
0V
GND
WP
WN
DC
WU
K1.1
R52 1K5 0.5%
R51 1K5 0.5%
R49 10K 0.5%
R50 10K 0.5%
R53 10K 0.5%
R54 10K 0.5%
R34 E30
R35 E30
R32 E30
R33 E30
VD10
VD12
VD9
VD11
VT17 KT8101A
VT18 KT8102A
VT15 KT8101A
VT16 KT8102A
VT13 KT814G
R30 2K2
R31 1K0
VT12 KT850A
VT14 KT851A
R29 51E
R28 K51
VT10 KT940A
VT11 KT9115A
C12 u10
VT8 KT972A
C16 220u 63V
C17 220u 63V
C14 1u5
C15 1u5
R45 11E
R46 1K0
C22 u10 FILM
R48 10K 0.5%
R47 3K0 0.5%
R44 33K2 0.5%
R43 33K2 0.5%
R42 33K2 0.5%
R41 10K 0.5%
VD4-VD12 1N4148
R20 10E
R21 10E
R18 75E
VT7 KT6116A
VT9 KT6117A
R19 K15
R22 1K0
R23 1K0
R24 2K2
VD8
R25 1K0
R26 2K0
VD4
VD5
VD6
VD7
C10 1u5
C11 1u5
R17 51K
R16 1K0
C7 u10
VT5 KT6116A
VT4 KT6116A
PR
U3 AD711JN
+15V
-15V
C8 10n
C9 10n
R10 K47
C13 10p
R27 3M0
VD3 LED
R11 15K
R12 1K0
R13 K20
VT3 KT6117A
R14 1K0
VT6 KT6117A
R15 K75
C21 n47 FILM
R40 20K 0.5%
+U
-U
R9 K75
VT2 KT6117A
VT1 KT6116A
C6 51p
R6 K82
R8 K82
R5 K75
R7 K75
VD1 15V
VD2 15V
C3 10p
R4 M20
U2 OP177GP
C4 u10
C5 u10
C20 u15 FILM
+15VO
-15VO
U1 AD744JN
R39 M10
R3 1K0 0.5%
R37 2M2
C19 1u0 FILM
R38 M10
C18 18p
R36 2K7
C2 1n2 FILM
R1 1K0 0.5%
R2 33K2 0.5%
C1 1u0 FILM
INPUT J1 BNC
STAR GROUND POINT

PA-9000 Power Amplifier Main Board (Protection)

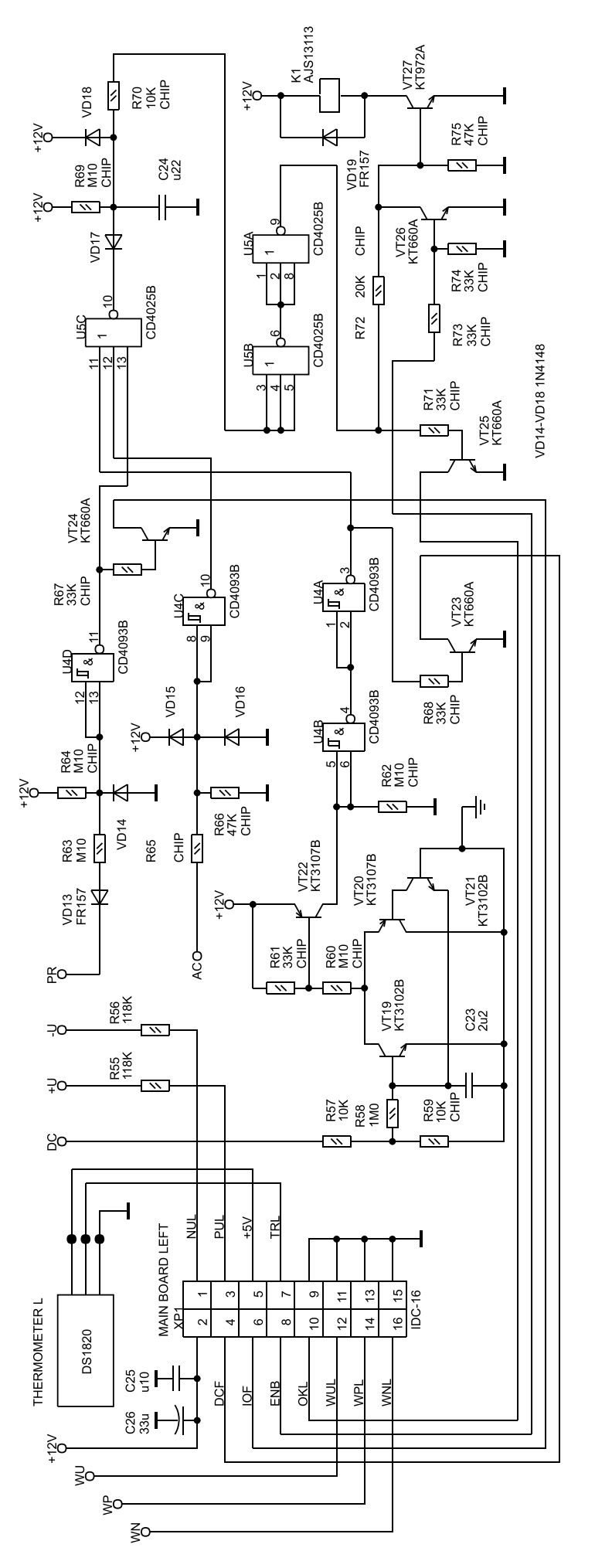

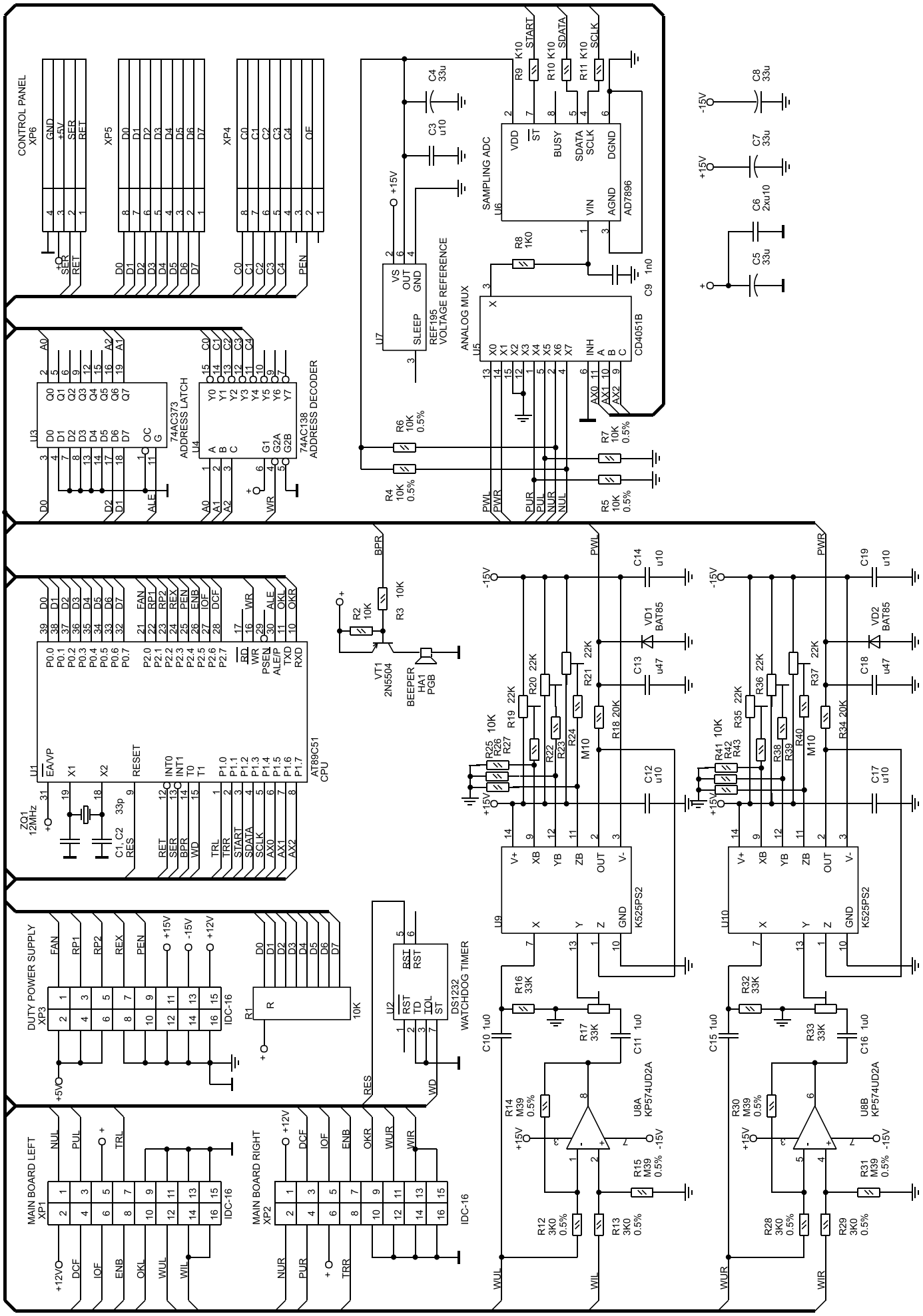
CONTROL PANEL
XP6
GND
+5V
SER
RET
XP5
D0
D1
D2
D3
D4
D5
D6
D7
XP4
C0
C1
C2
C3
C4
QF
PEN
SAMPLING ADC
U6
AD7896
VDD
ST
BUSY
SDATA
SCLK
DGND
VIN
AGND
R9 K10
R10 K10
R11 K10
START
SDATA
SCLK
C4 33u
C3 u10
+15V
REF195
VOLTAGE REFERENCE
U7
VS
OUT
GND
SLEEP
R8 1K0
C9 1n0
ANALOG MUX
U5
CD4051B
INH
AX0
AX1
AX2
R6 10K 0.5%
R4 10K 0.5%
R7 10K 0.5%
R5 10K 0.5%
PWL
PWR
PUR
PUL
NUR
NUL
-15V
C8 33u
C7 33u
C6 2xu10
C5 33u
U3
74AC373
ADDRESS LATCH
U4
74AC138
ADDRESS DECODER
ALE
WR
U1
AT89C51
CPU
EA/VP
X1
X2
RESET
INT0
INT1
T0
T1
P1.0
P1.1
P1.2
P1.3
P1.4
P1.5
P1.6
P1.7
RD
PSEN
ALE/P
TXD
RXD
FAN
RP1
RP2
REX
PEN
ENB
IOF
DCF
OKL
OKR
ZQ1
12MHz
C1, C2
33p
RES
RET
SER
BPR
WD
TRL
TRR
START
SDATA
SCLK
AX0
AX1
AX2
R2 10K
R3 10K
VT1
2N5504
BEEPER
HA1
PGB
C14 u10
VD1
BAT85
C13 u47
R20 22K
R19 22K
R21 22K
R22
R23
R24
M10
R18 20K
R25 10K
R26
R27
C12 u10
U9
K525PS2
V+
XB
YB
ZB
OUT
V-
GND
R16 33K
R17 33K
C10 1u0
C11 1u0
R14 M39 0.5%
R15 M39 0.5%
U8A
KP574UD2A
R12 3K0 0.5%
R13 3K0 0.5%
WUL
WIL
C19 u10
VD2
BAT85
C18 u47
R36 22K
R35 22K
R37 22K
R38
R39
R40
M10
R34 20K
R41 10K
R42
R43
C17 u10
U10
K525PS2
R32 33K
R33 33K
C15 1u0
C16 1u0
R30 M39 0.5%
R31 M39 0.5%
U8B
KP574UD2A
R28 3K0 0.5%
R29 3K0 0.5%
WUR
WIR
DUTY POWER SUPPLY
XP3
IDC-16
+15V
-15V
+12V
+5VO
R1
10K
U2
DS1232
WATCHDOG TIMER
RST
TD
TOL
ST
MAIN BOARD LEFT
XP1
NUL
PUL
TRL
+12VO
DCF
IOF
ENB
OKL
WUL
WIL
MAIN BOARD RIGHT
XP2
NUR
PUR
TRR
OKR
WUR
WIR

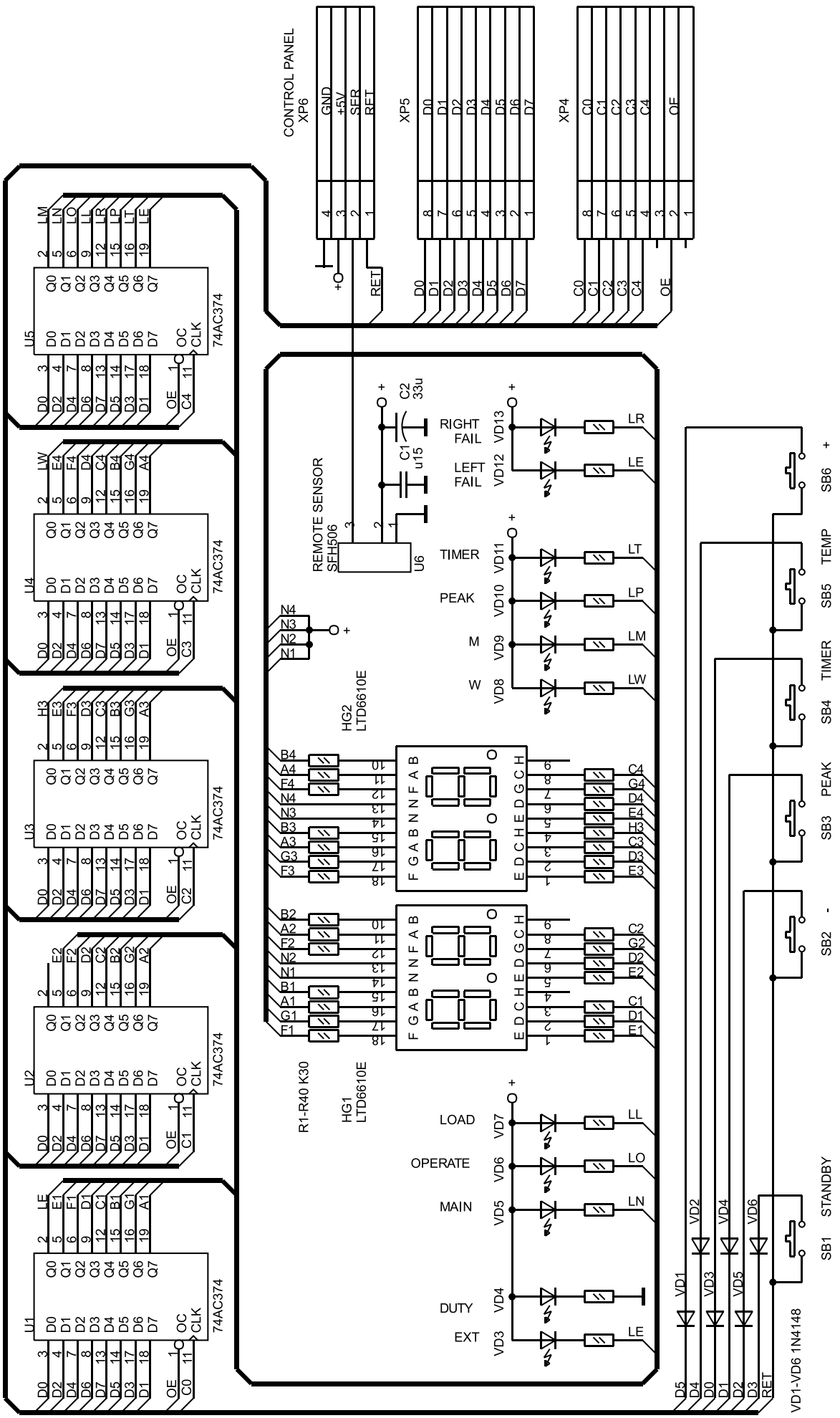
CONTROL PANEL
XP6
GND
+5V
SER
RET
XP5
D0
D1
D2
D3
D4
D5
D6
D7
XP4
C0
C1
C2
C3
C4
OE
U1
U2
U3
U4
U5
74AC374
REMOTE SENSOR
SFH506
U6
C1
u15
C2
33u
RIGHT FAIL
LEFT FAIL
TIMER
PEAK
M
W
LOAD
OPERATE
MAIN
DUTY
EXT
HG2
LTD6610E
HG1
LTD6610E
R1-R40 K30
SB1 STANDBY
SB2 -
SB3 PEAK
SB4 TIMER
SB5 TEMP
SB6 +
VD1-VD6 1N4148

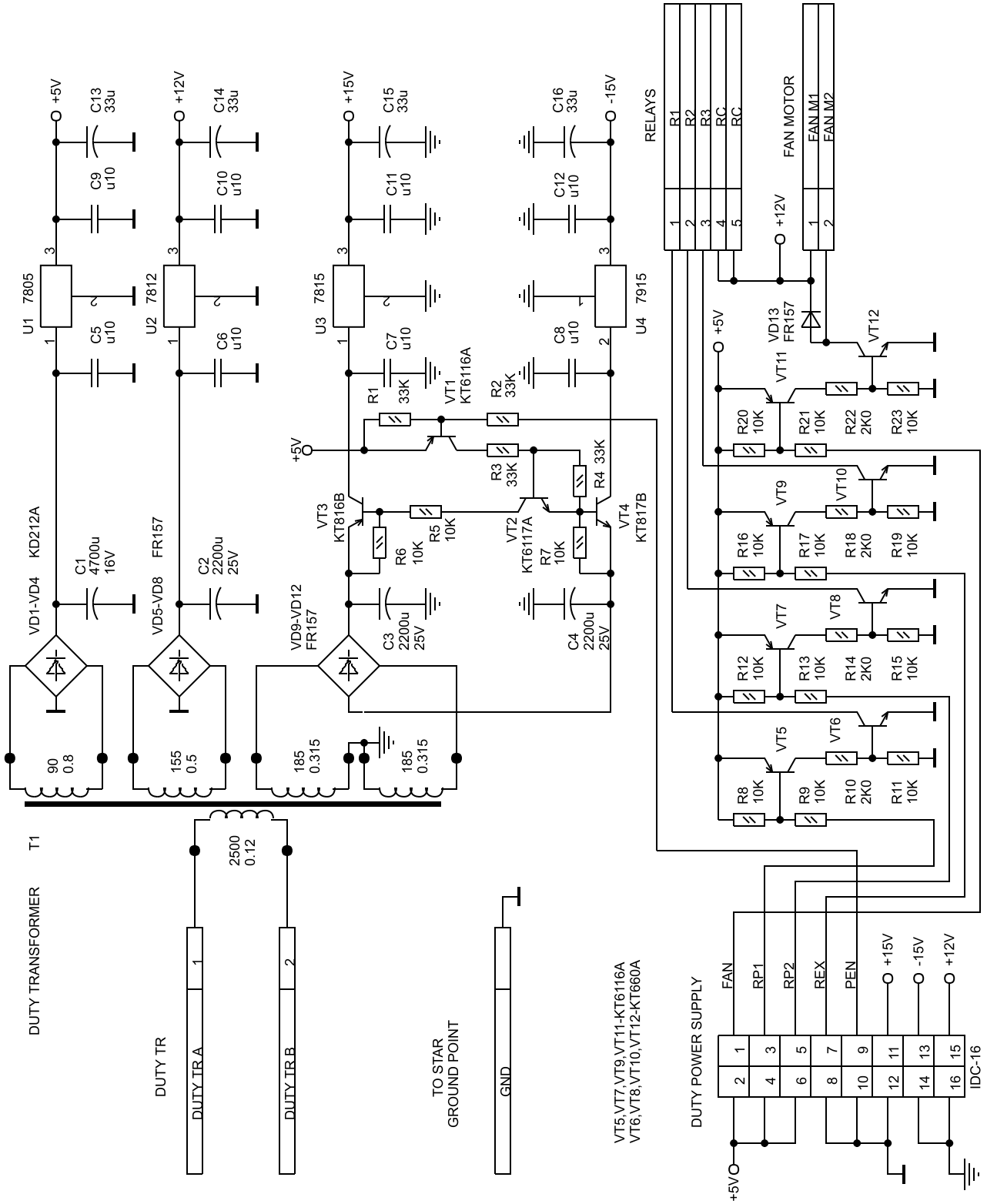
+5V
C13 33u
C9 u10
U1 7805
C5 u10
+12V
C14 33u
C10 u10
U2 7812
C6 u10
+15V
C15 33u
C11 u10
U3 7815
C7 u10
-15V
C16 33u
C12 u10
U4 7915
C8 u10
RELAYS
R1
R2
R3
RC
RC
FAN MOTOR
FAN M1
FAN M2
VD1-VD4 KD212A
C1 4700u 16V
VD5-VD8 FR157
C2 2200u 25V
VD9-VD12 FR157
C3 2200u 25V
C4 2200u 25V
90 0.8
155 0.5
185 0.315
185 0.315
VT1 KT6116A
R1 33K
R2 33K
R3 33K
R4 33K
VT3 KT816B
R5 10K
R6 10K
VT2 KT6117A
R7 10K
VT4 KT817B
VD13 FR157
VT12
VT11
R20 10K
R21 10K
R22 2K0
R23 10K
VT9
VT10
R16 10K
R17 10K
R18 2K0
R19 10K
VT7
VT8
R12 10K
R13 10K
R14 2K0
R15 10K
VT5
VT6
R8 10K
R9 10K
R10 2K0
R11 10K
T1
DUTY TRANSFORMER
2500 0.12
DUTY TR
DUTY TR A
DUTY TR B
TO STAR GROUND POINT
GND
VT5,VT7,VT9,VT11-KT6116A
VT6,VT8,VT10,VT12-KT660A
DUTY POWER SUPPLY
FAN
RP1
RP2
REX
PEN
+15V
-15V
+12V
IDC-16

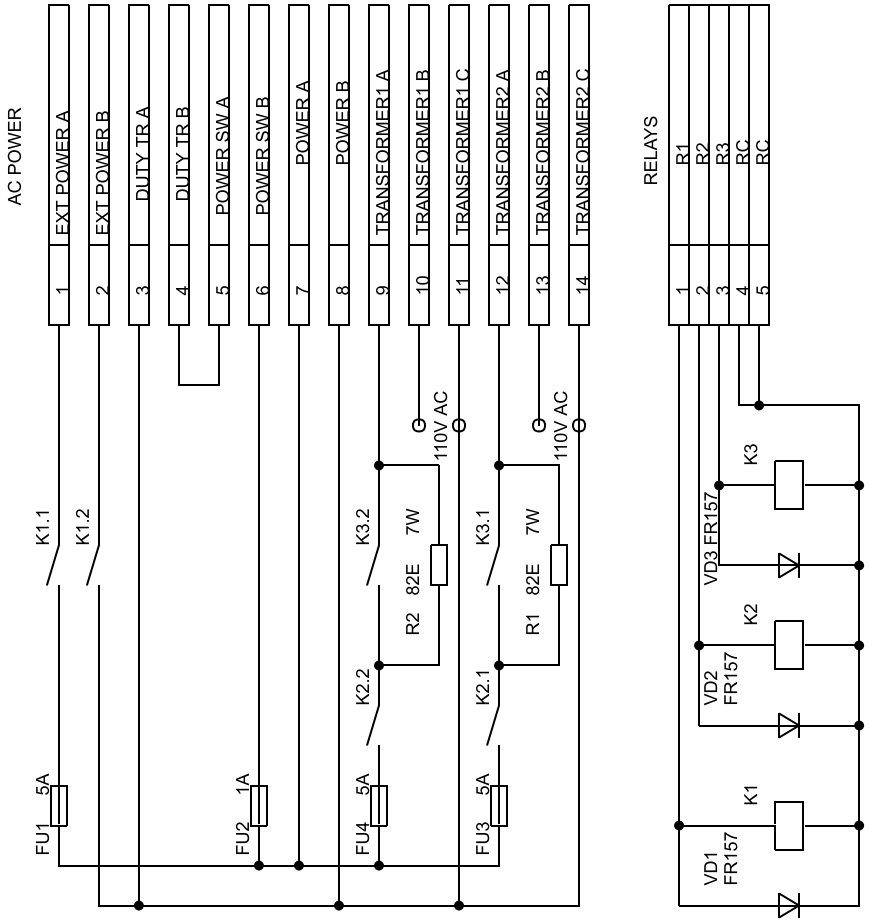
AC POWER
1 EXT POWER A
2 EXT POWER B
3 DUTY TR A
4 DUTY TR B
5 POWER SW A
6 POWER SW B
7 POWER A
8 POWER B
9 TRANSFORMER1 A
10 TRANSFORMER1 B
11 TRANSFORMER1 C
12 TRANSFORMER2 A
13 TRANSFORMER2 B
14 TRANSFORMER2 C
RELAYS
1 R1
2 R2
3 R3
4 RC
5 RC
K1.1
K1.2
FU1 5A
FU2 1A
FU4 5A
FU3 5A
K3.2
K2.2
K3.1
K2.1
R2 82E 7W
R1 82E 7W
110V AC
110V AC
K3
K2
K1
VD3 FR157
VD2 FR157
VD1 FR157

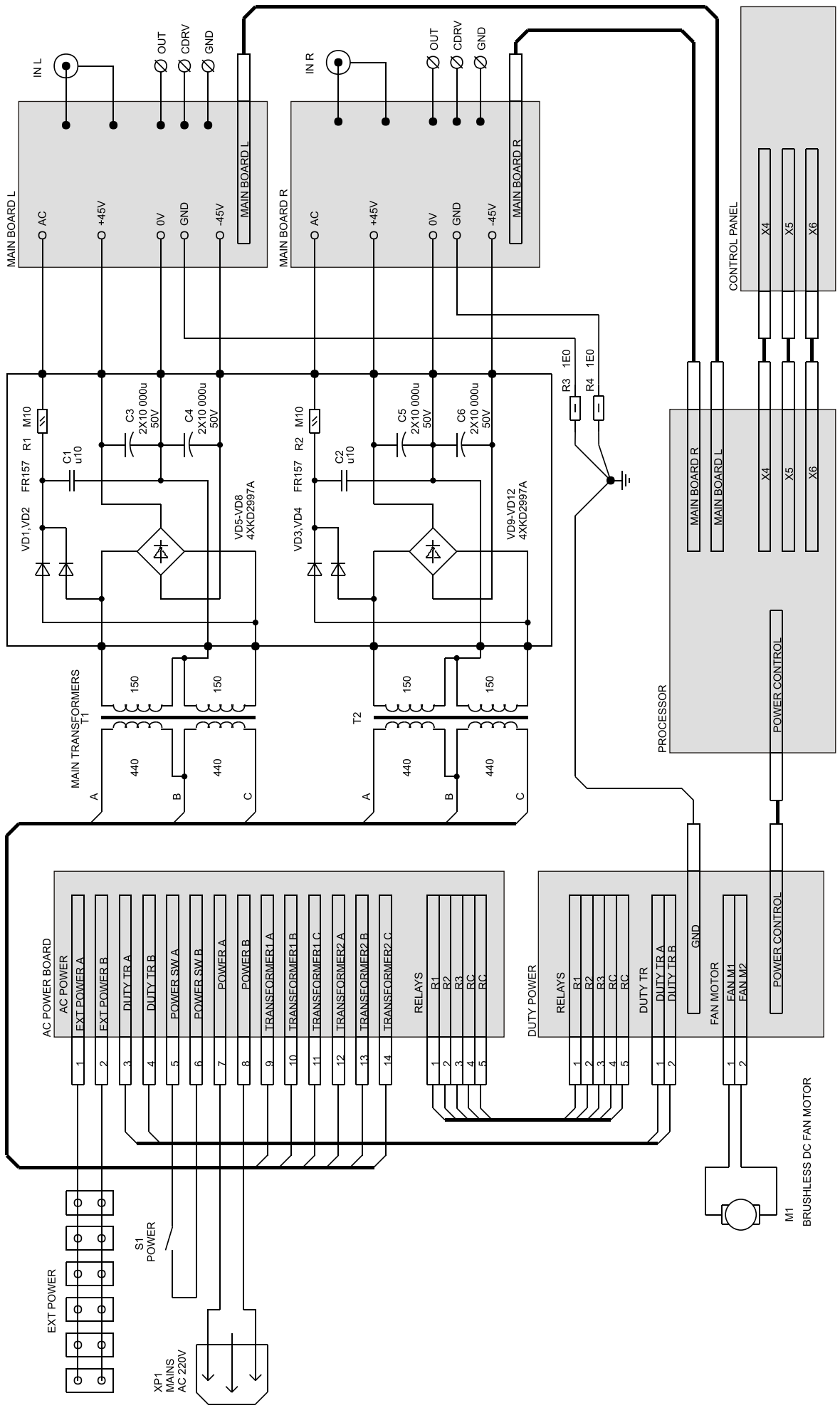
IN L
OUT
CDRV
GND
MAIN BOARD L
AC
+45V
0V
GND
-45V
MAIN BOARD L
IN R
OUT
CDRV
GND
MAIN BOARD R
AC
+45V
0V
GND
-45V
MAIN BOARD R
CONTROL PANEL
X4
X5
X6
R3 1E0
R4 1E0
M10
R1
FR157
C1 u10
C3 2X10 000u 50V
C4 2X10 000u 50V
VD1,VD2
VD5-VD8 4XKD2997A
M10
R2
FR157
C2 u10
C5 2X10 000u 50V
C6 2X10 000u 50V
VD3,VD4
VD9-VD12 4XKD2997A
MAIN BOARD R
MAIN BOARD L
X4
X5
X6
PROCESSOR
POWER CONTROL
MAIN TRANSFORMERS
T1
T2
150
440
A
B
C
AC POWER BOARD
AC POWER
EXT POWER A
EXT POWER B
DUTY TR A
DUTY TR B
POWER SW A
POWER SW B
POWER A
POWER B
TRANSFORMER1 A
TRANSFORMER1 B
TRANSFORMER1 C
TRANSFORMER2 A
TRANSFORMER2 B
TRANSFORMER2 C
RELAYS
R1
R2
R3
RC
RC
DUTY POWER
RELAYS
DUTY TR
DUTY TR A
DUTY TR B
GND
FAN MOTOR
FAN M1
FAN M2
POWER CONTROL
M1
BRUSHLESS DC FAN MOTOR
EXT POWER
S1
POWER
XP1
MAINS
AC 220V