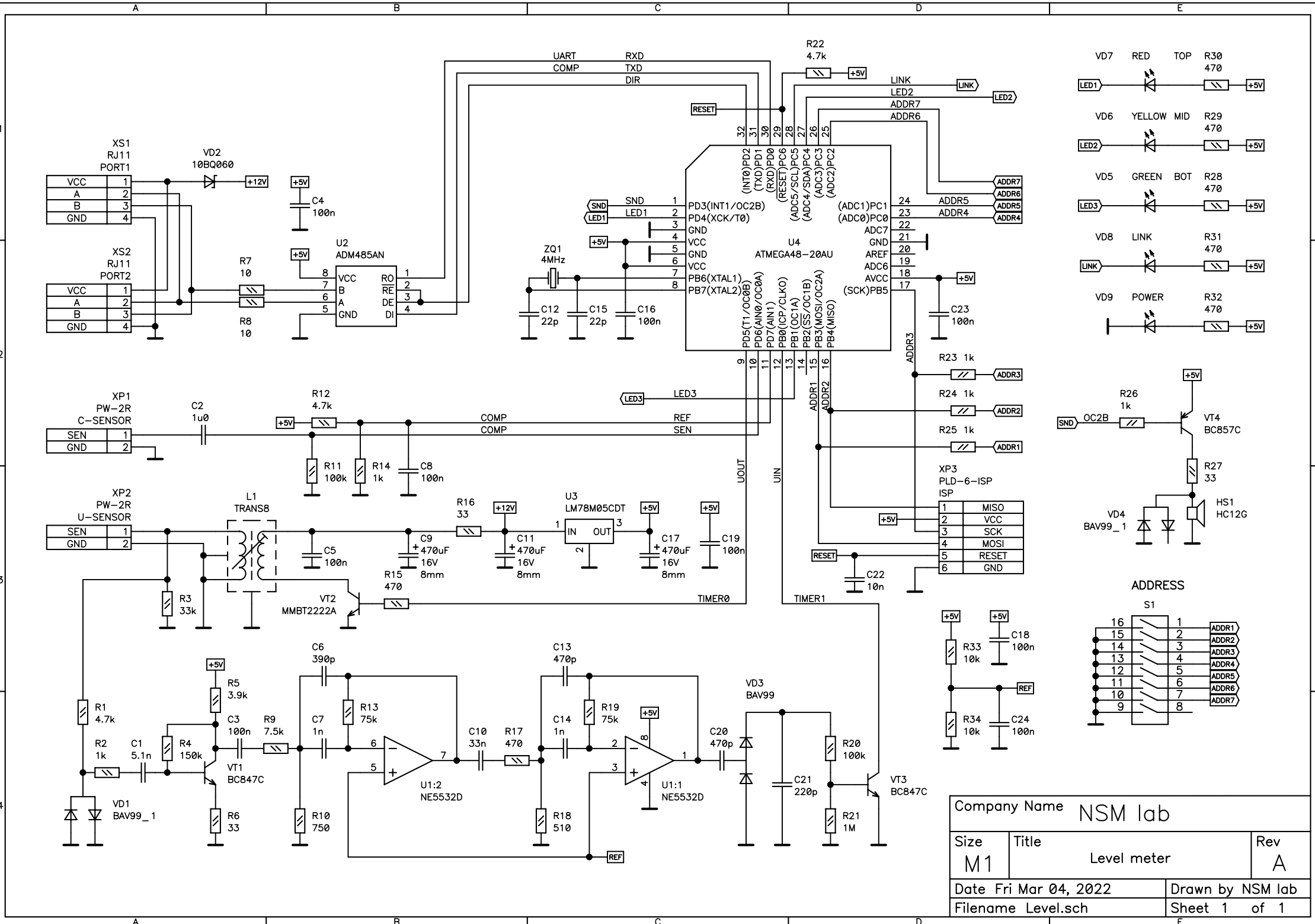

Company Name	NSM lab	
Size M1	Title Level meter	Rev A
Date Fri Mar 04, 2022		Drawn by NSM lab
Filename Level.sch		Sheet 1 of 1