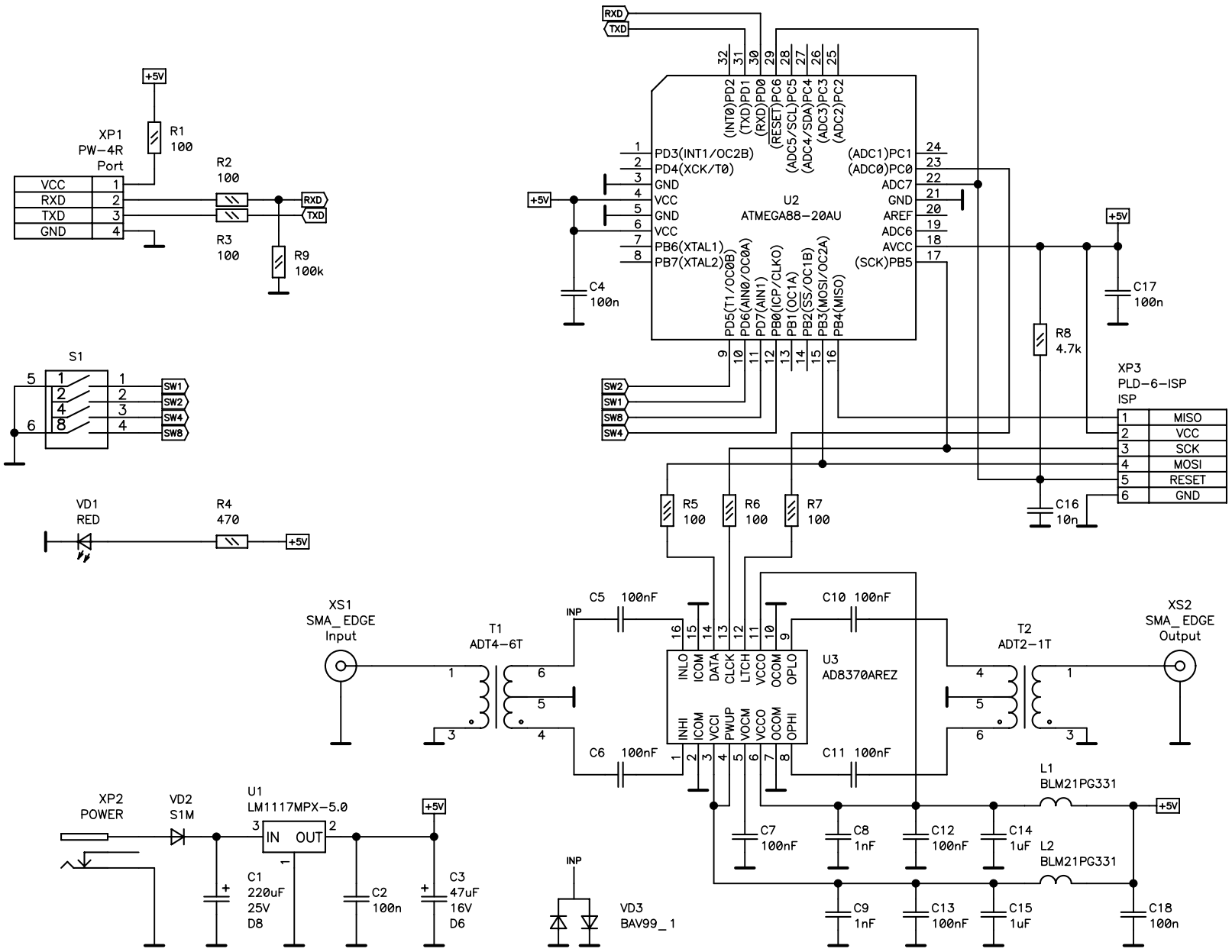


| | | |
|---|---|---|
| Company Name NSM lab | | |
| Size M1 | Title Wideband Amplifier AMP-605 | Rev A |
| Date Fri Dec 17, 2021 | | Drawn by NSM lab |
| Filename AMP-605_B.sch | | Sheet 1 of 1 |