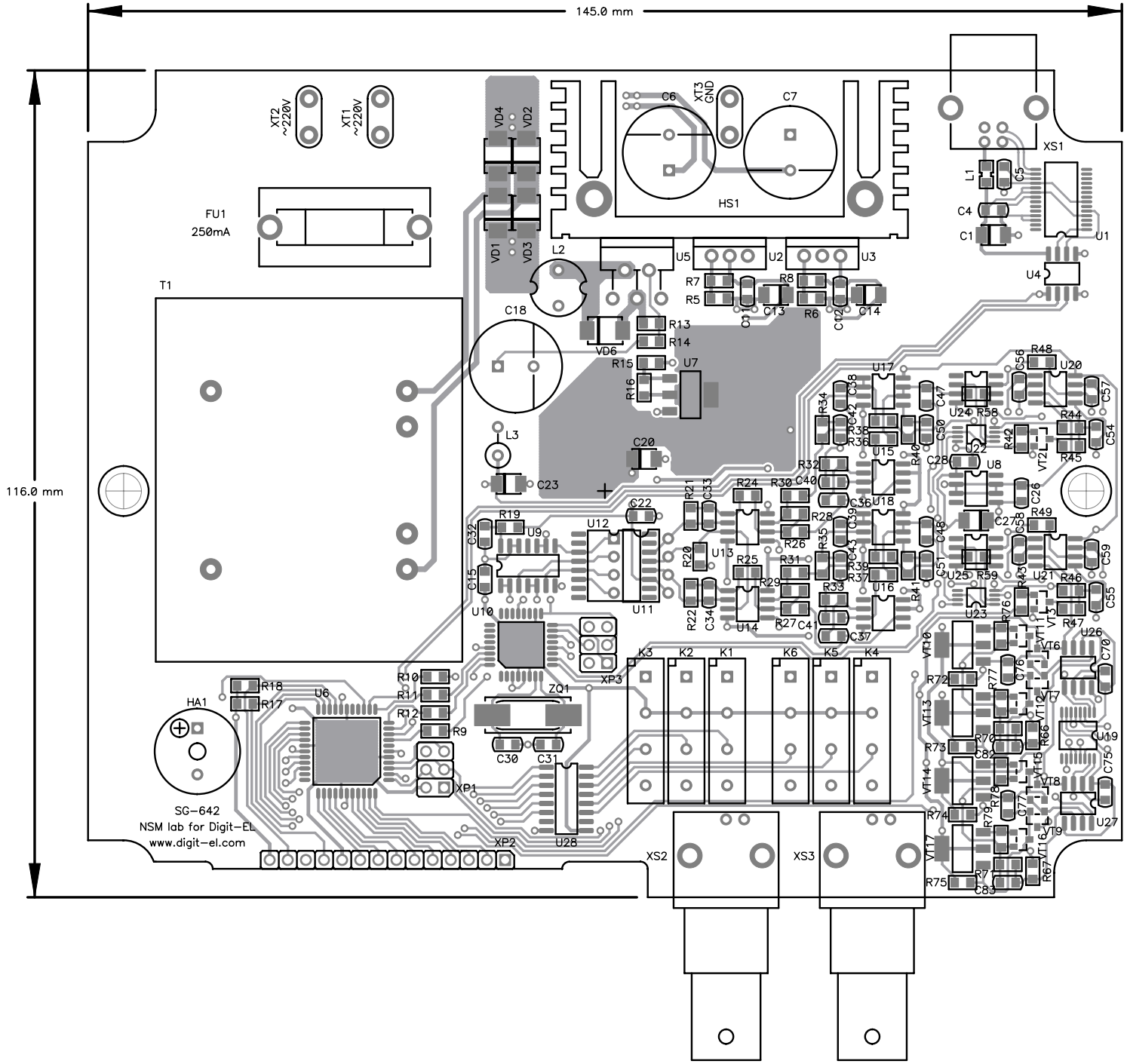
145.0 mm
116.0 mm
XT2 ~220V
XT1 ~220V
FU1 250mA
T1
VD4
VD2
VD1
VD3
C6
XT3 GND
C7
HS1
XS1
L1
C5
C4
C1
U1
U4
L2
U5
U2
U3
R7
R5
R8
R6
C11
C13
C12
C14
C18
VD6
R13
R14
R15
R16
U7
L3
C20
C23
C22
R19
U9
U12
C32
C15
U10
U11
R21
C33
R24
R30
R20
U13
R25
R29
R22
C34
U14
R27
C41
C37
R32
C40
R28
C36
C39
R26
R35
R31
R33
R36
R37
U15
U18
U16
R34
C38
C42
C43
C44
C47
C50
C48
C51
R40
R41
U17
U24
R58
U22
C28
U8
R42
VT2
R45
R48
U20
C56
C57
R44
C54
C26
C27
C58
R49
C59
U25
R59
R43
U21
R46
C55
U23
R76
VT3
VT11
R47
U26
C70
VT10
VT6
R72
R77
C76
VT12
VT7
R66
U19
R73
R70
C82
VT13
VT14
VT15
VT8
C75
R78
R79
C77
R74
VT16
VT9
U27
VT17
R75
R67
C83
K3
K2
K1
K6
K5
K4
XP3
ZQ1
C30
C31
U28
R18
R17
HA1
U6
R10
R11
R12
R9
XP1
XP2
XS2
XS3
SG-642
NSM lab for Digit-EL
www.digit-el.com

145,0 mm
116,0 mm
C3
R1
C10
R53
R52
C64
C63
R50
R51
C60
C62
C17
R56
R57
C67
C66
R54
R55
C61
C65
C71
R62
R63
R68
C78
VT4
C68
C25
C69
R69
R64
R65
C74
C81
VT5
C80
C79
R103
R104
R105
R97
R98
R99
R85
R86
R100
R101
R102
R96
R95
R94
R91
R92
R93
R87
R1
R82
R83
R88
R89
R80
R90
R84
C46
C45
C53
C52
C44
C49
C9
C8
C16
R23
C21
C19
C35
C2
R2
C29
R60
C24
C73
C72
R61
R4
VT1
R3
VD5

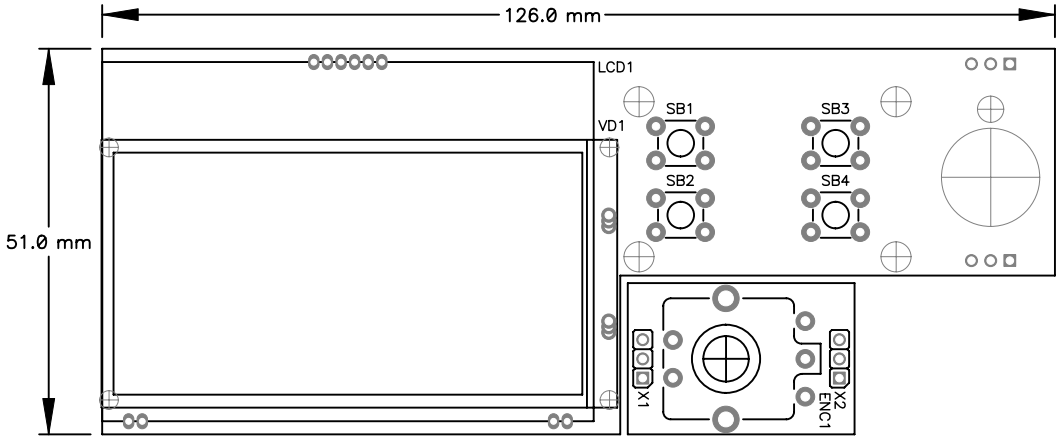
126.0 mm
51.0 mm
LCD1
VD1
SB1
SB2
SB3
SB4
X1
X2
ENC1

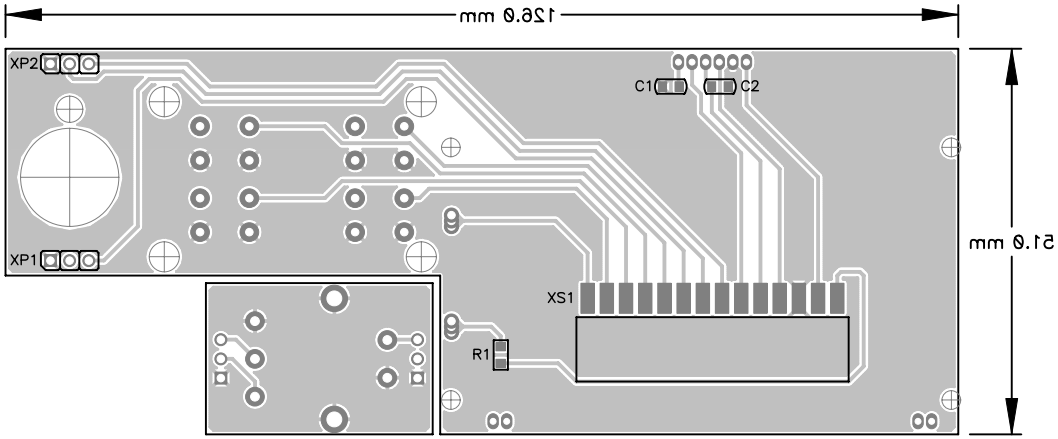
126.0 mm
51.0 mm
XP2
XP1
C1
C2
XS1
R1